Echolocation

Engineering you can see.

Interactive 3D equipment, recorded process replays and drawing-linked training reviews.

Open the engineering lab



See how the parts fit.

Interactive 3D equipment training, built around one approved asset.

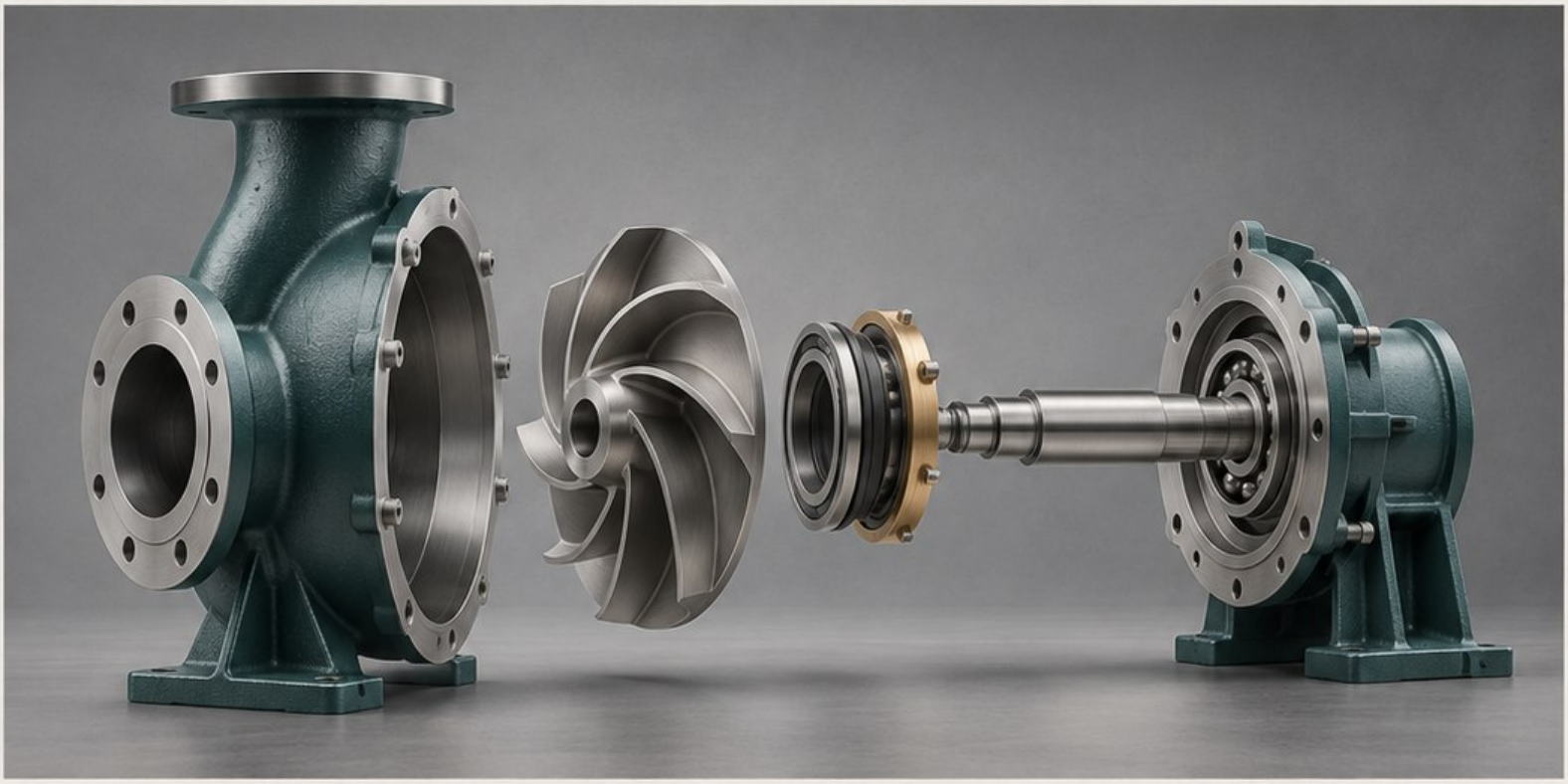

Give the instructor a model they can open, rotate and use to explain where a part sits and what it does.

What SFE delivers

A labelled browser cutaway, a guided sequence, and agreed model and media files for handover.

What you bring

An approved drawing or model, the components that matter, and the question the learner should be able to answer.

Explore 3D equipment training

Replay the event.

Follow a recorded signal from the input change to the response.



In the browser lab, replay water carryover in a saved separator simulation. Jump to the feed change and inspect the peak against the source trace.

What SFE delivers

A timeline with event markers, consistent units, selected readings and a short record of the source and assumptions.

What you bring

An archived signal or saved simulation, the units, and the event your team needs to investigate.

Open the separator replay

Follow the drawing change.

Find the lessons, model labels and quiz items that need review.

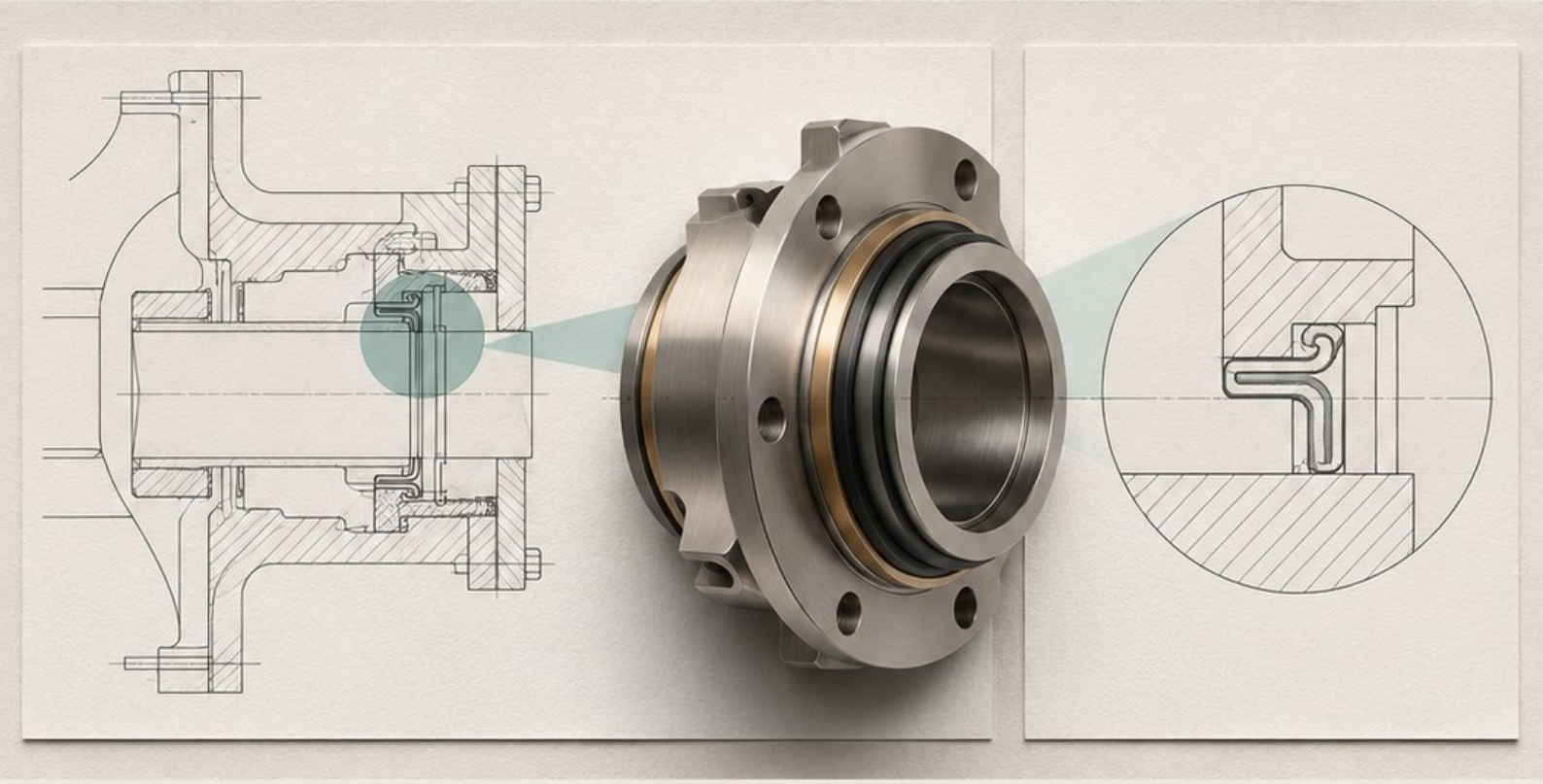

Trace each proposed training update back to an approved drawing callout. Hold changes where the evidence is incomplete.

What SFE delivers

A source-linked register, a reviewer queue, and a decision export showing revisions and unresolved checks.

What you bring

An approved before-and-after drawing pair, the revision note, and the lesson or questions affected.

Open the sample drawing review

Start with one case.

One machine, one event, or one drawing revision.



Scope a project

Tell SFE who will use it, what they need to do, and what material you can share. We’ll reply by email with a proposed scope and quote.

Choose a project and request a quote